

MARTEK
AUTOMATION

FC1000

Flex Cell Automation

Overview

The Martek Automation FC1000 is a cost-effective, highly configurable robotic work cell engineered for back-end semiconductor assembly. Optimized for a wide range of applications—including pick-and-place, part transfer, dispensing, optical inspection (AOI), functional testing and plasma cleaning of microelectronic devices—the FC1000 delivers exceptional versatility. It features a multi configurable X-Y linear motor cartesion actuator and a range of Z-axis options, including voice coil Z and theta, servo, stepper, and pneumatic configurations, enabling precise, application-specific performance. With the capability to integrate multiple functions into a single work head, the FC1000 significantly enhances throughput and operational efficiency, making it a leading solution for customized semiconductor manufacturing automation.

FC1000 Flexible Automation

Best in class, scaled for the application

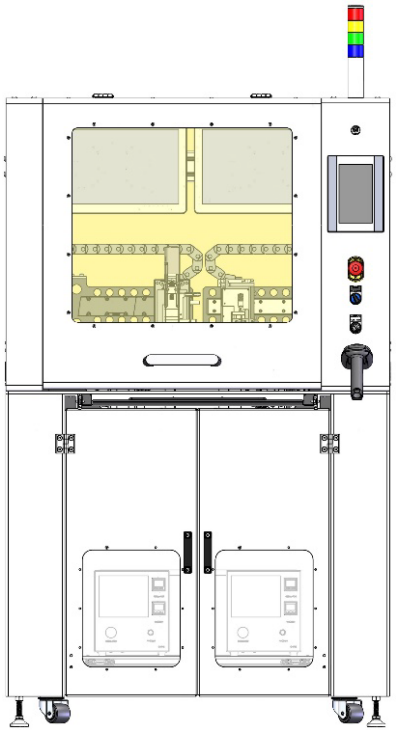

FC1000 In-Line

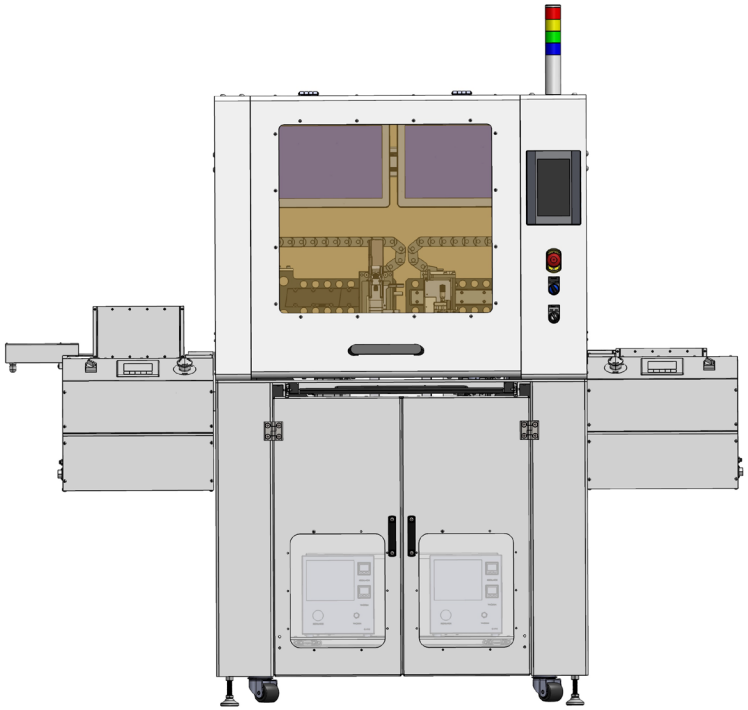

FC1000 Work Cell
Magazine to Magazine

MARTEK AUTOMATION

FC1000 Flexible Automation

Operator Features

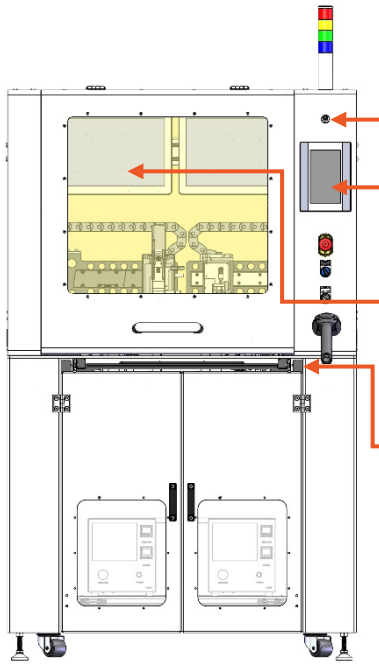

USB Port

Operations Panel

Dual Monitors (Internal)
(1) Vision
(2) Recipe and Set Up

Keyboard Tray

Slide out
accessories shelf

Front and rear
access doors

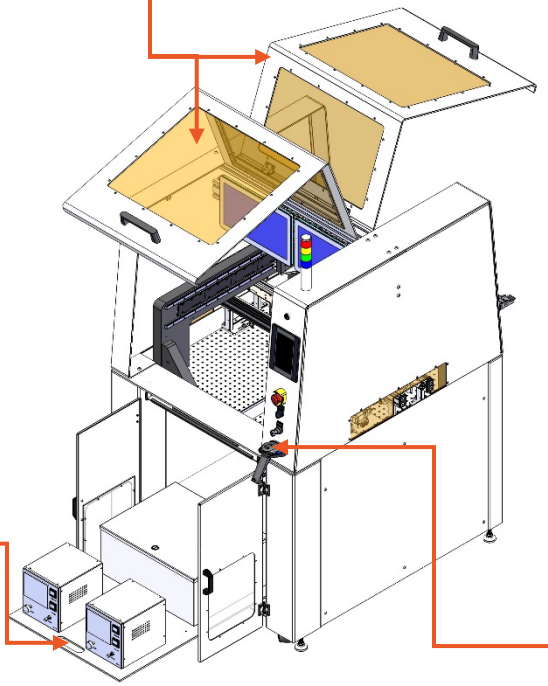

Handheld
Barcode
Reader

X,Y Cartesian Robot Overview

Linear Motors with W Absolute Encoders.
600 mm X and 150 mm Y Axis travel.

Front and rear
process head
mounting points

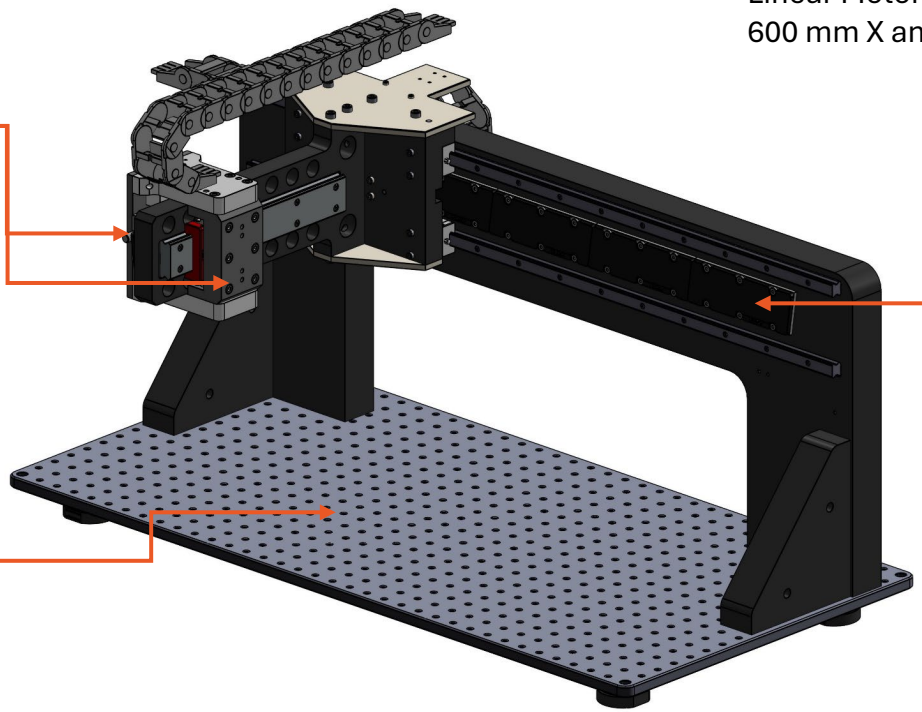

Optical Tables W
Vibration Isolators

X,Y Cartesian Robot Overview

Multiple Axis configurations available

(1) Head
600 mm X, 150 mm Y
Single phase conveyor
600 X 150 mm work envelope

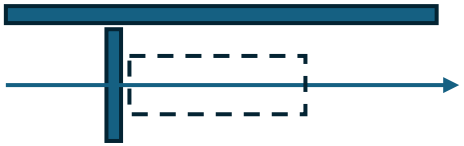

(2) Head
(2)X 300 mm X, (2)X 150 mm Y
Dual phase conveyor
(2)X 300 X 150 mm work envelope

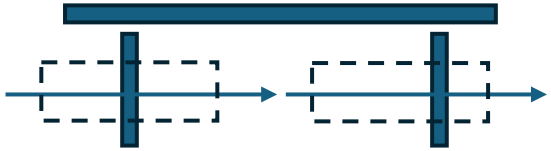

PROCESSES

- Plasma Clean
- Dispense
- AOI

(1) Head
600 mm X, 300 mm Y
Dual lane, Single phase conveyors
600 X 300 mm work envelope

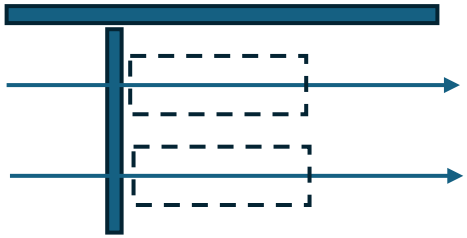

PROCESSES

- Part Transfer
- AOI Test and Sort
- Functional Test and Sort

(2) Head
(2)X 150 mm X, (2)X 600 mm Y
Dual phase conveyor
(2)X 150 X 600 mm work envelope

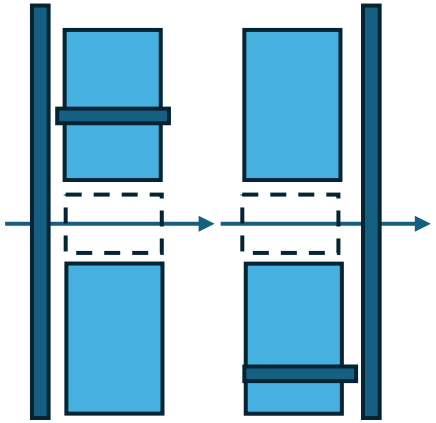

PROCESSES

- Combo Dispense & P&P
- Dual P&P
- Dual AOI / Sort
- Dual Functional Test & Sort

Process Head Options

Best in class, scaled for the application

Dispense

Pick and Place

Stepper Motor Z Axis for recipe driven dispense height.

Auger Dispense Valve Best for deep package access and abrasive epoxies.

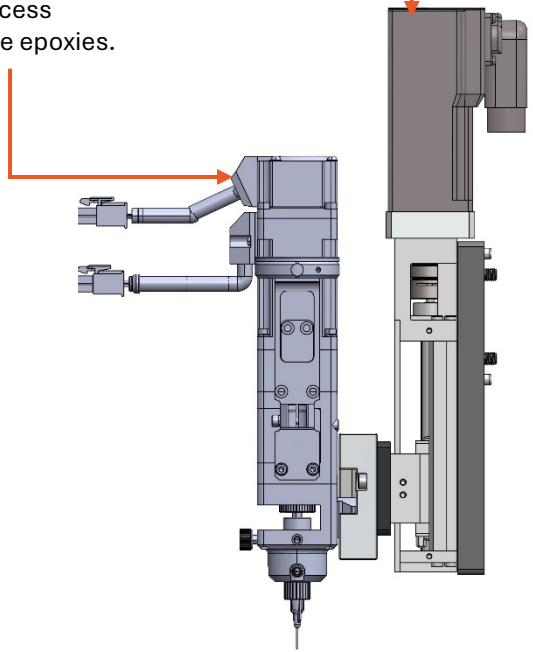

1 to 4 SMAC Linear/Theta Actuators W programable placement force. 1 Actuator per pick head eliminates tool change and motion.

Vision camera for look down part placement correction.

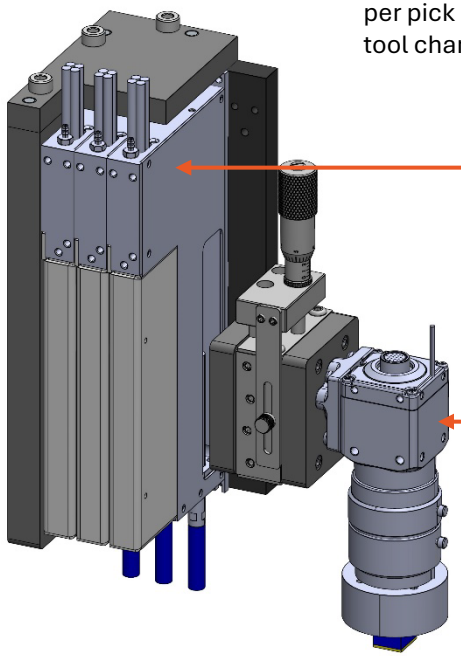

MARTEK AUTOMATION

Process Head Options

Part Transfer

Best in class, scaled for the application

Inspect & Sort

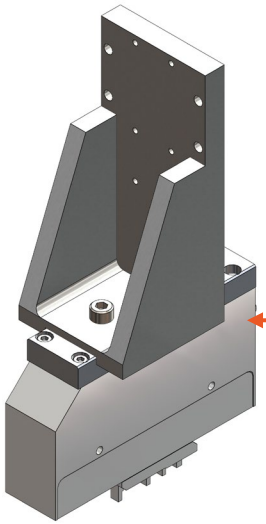

Servo Gripper
- Recipe driven part size
- Force control

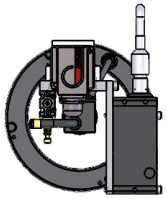

TOP VIEW

2D Vision Camera

3D Laser Scanner

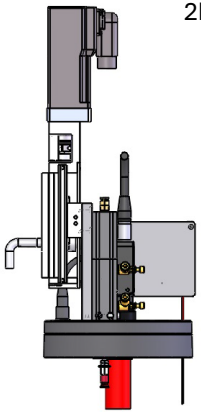

FRONT VIEW

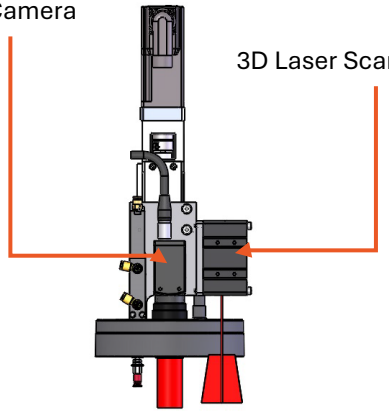

SIDE VIEW

MARTEK AUTOMATION

Process Head Options

Clean

Best in class, scaled for the application

Mark

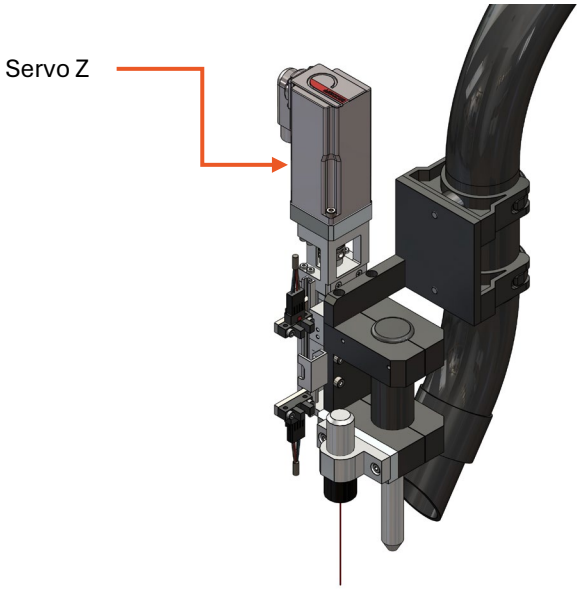

Atmospheric Plasma



Inkjet Marker

Other Options

Pick and Place

Best in class, scaled for the application

Transfer

Waffle Plates can be dedicated to Part Configuration.

Waffle Plates can be up to 125 sq. in.

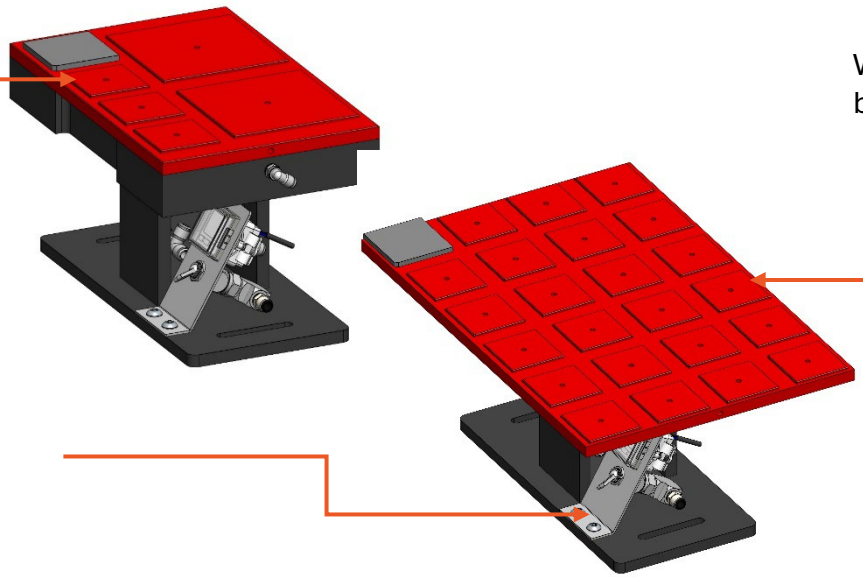

Vacuum Base for holding Waffle Plates.

Waffle Pack Holder

Other Options

Pick and Place

Best in class, scaled for the application

4 Channel Base with 1 to 4 Tape Feeders or 2 bases up to 8 Feeders

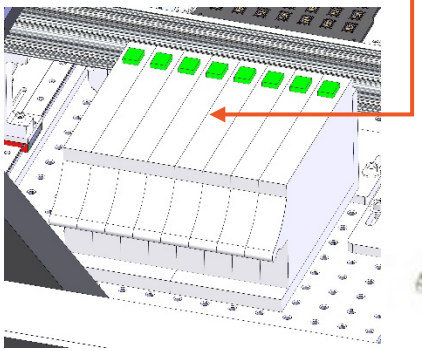



PPM 8mm x 2mm Feeder
0402 - 0201

Tape & Reel Feeder

Other Options

Transfer

Best in class, scaled for the application

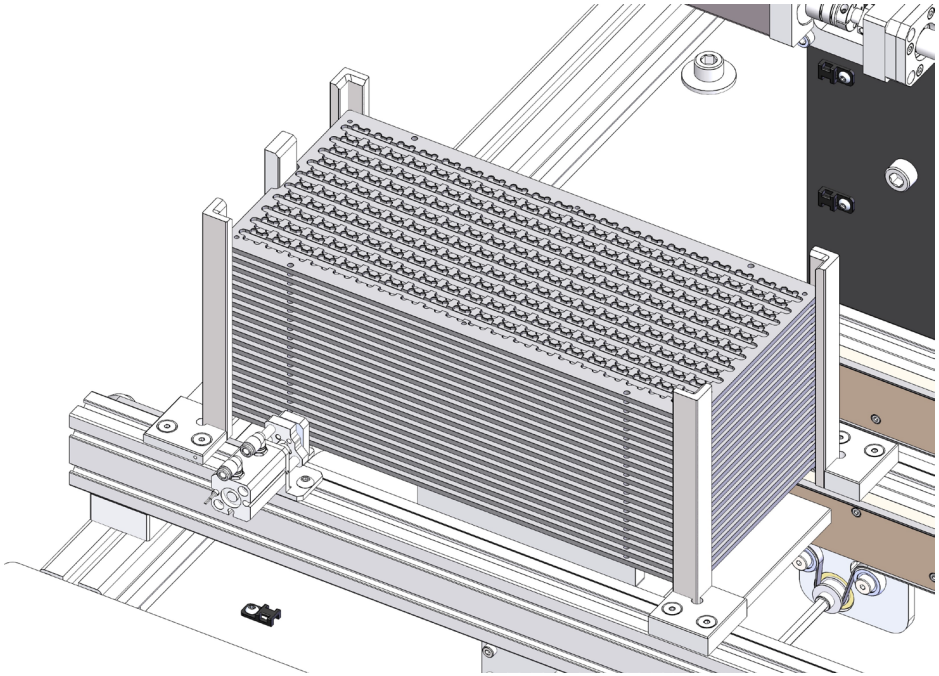

Insitu Carrier De Stacker/Feeder
(used in component transfer station)

P&P Application Example

Assembly

Best in class, scaled for the application

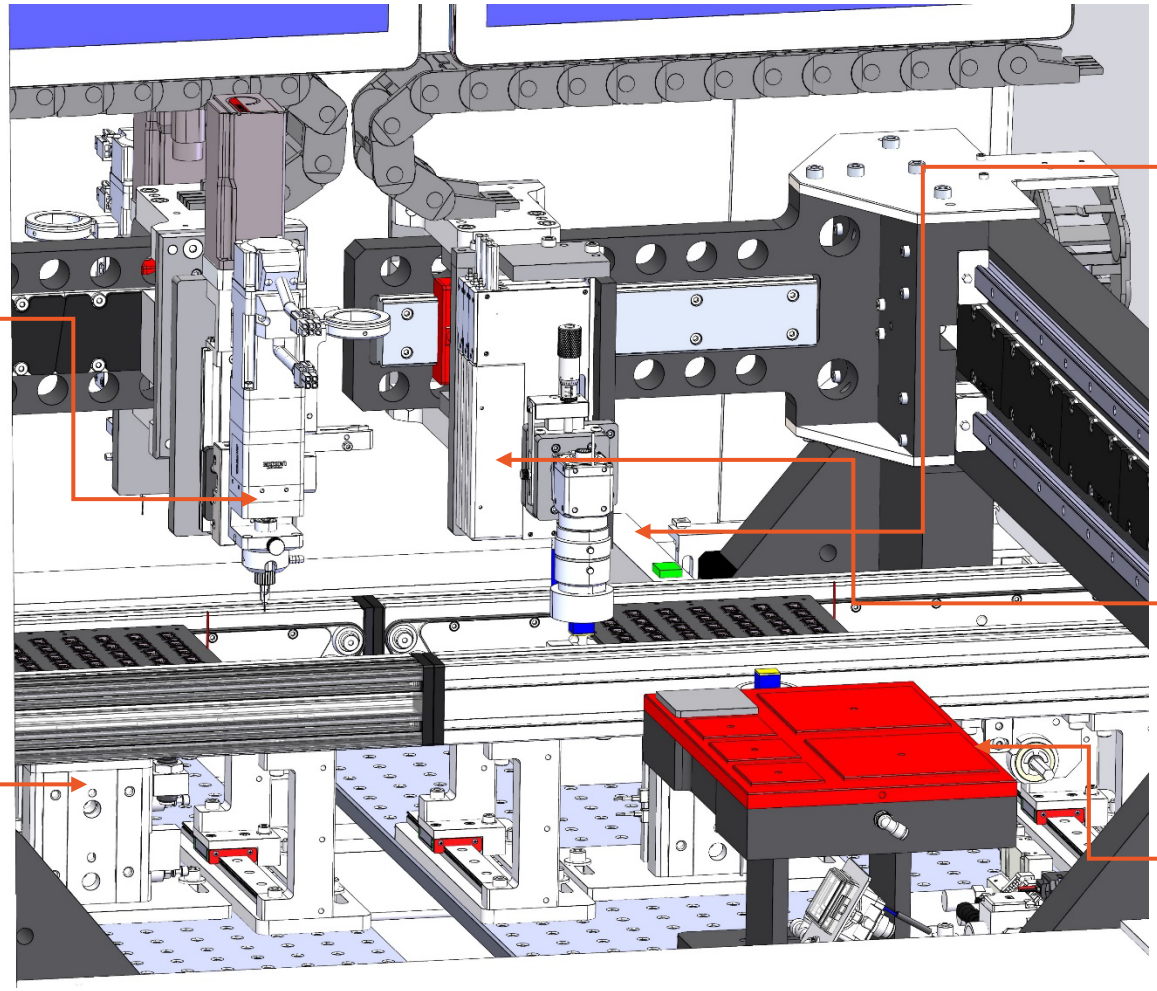

Dispense arm includes:
(2) Auger Valves
(1) For conductive epoxy
(1) for non conductive epoxy

Lift and Clamp Tooling

Tape Feeders (4)

Pick & Place Head includes:
(3) SMAC Linear/Theta Actuators,
(1) look down Camera

Waffle Pack Holder (front access) and 4 Channel Tape and Reel (rear access)

MARTEK AUTOMATION

Process

After the sale

Support

Warranty

- 1 year parts and labor
- 2 years Software and Mechanical Design
- Software upgrades as available
- Service contract available upon request
- Telephone support same day
- On Site support, 1 business day
    - Customer to carry recommended spare parts

Thank you

Have specific questions or inquiries? Let's talk

sales@martekautomation.com

41728 Eastman Dr., Murrieta, CA

951-305-0541 x101

www.martekautomation.com

The information contained in this brochure is proprietary to Martek Automation. It is not to be disclosed, reproduced, or used in any other matter except to explore potential business partnerships with Martek Automation and its associates.