MARTEK AUTOMATION

Standard Products

Maximizing Production Through Modular Automation Solutions

Models 1130U_NA / 1130D_NA

Magazine Handlers

Affordable Flexible Automation

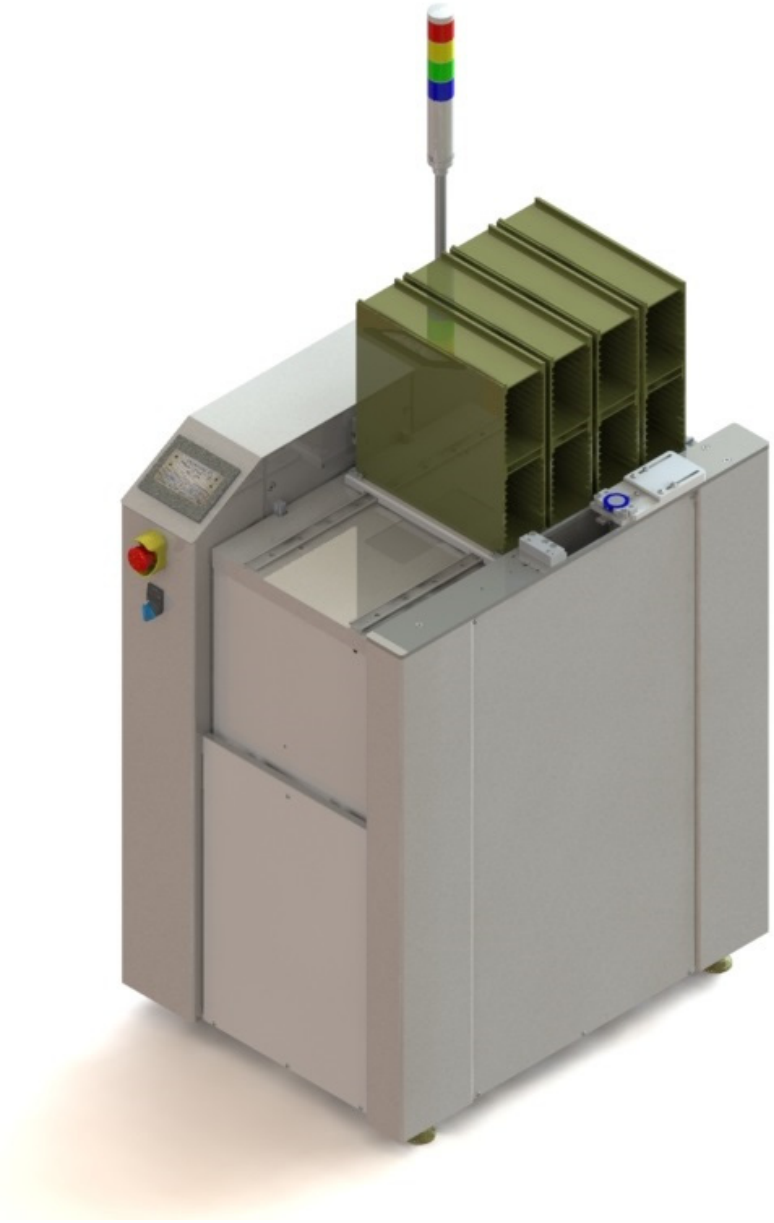

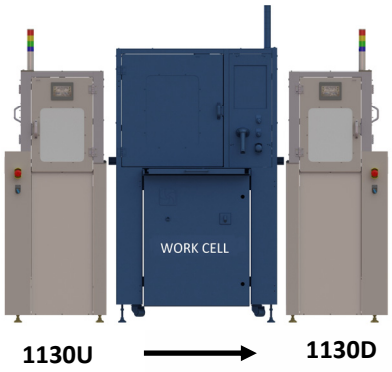

Martek Automation's 1130U Magazine Unloader is designed to remove un-processed devices (usually on a device carrier) from magazines and onto an integrated production line or into a work cell. 1130D feeds the finished devices back into empty slots in a magazine to be transported to the next line or work cell.

These Magazine Handlers have the highest capacity within a small footprint and are SMEMA compatible and can be configured for many different type of magazines.

With over 25 years' experience handling all types of devices and installations all over the world Martek is established as a worldwide leader in automated material handling for the Semi-Conductor Micro Electronics Industry.

www.martekautomation.com ∘ *951-304-0541 x101* ∘ *41728 Eastman Dr., Murrieta, CA*

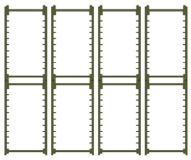

High Magazine Capacity

- 3.1 Auer Boat Qty. 8
- 4.3 Auer Boat Qty. 6
- 5.4 Auer Boat Qty. 4

Magazine Dimensions

Width: 2 to 6 in.

Length: 12 in. max



Operator HMI

Intuitive, easy to operate

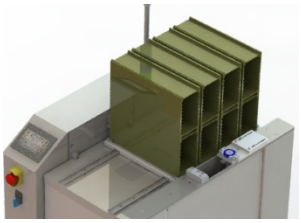

Easy Access

Easy load and unload of

1130U/D Standard Features

SMEMA Compatible

SMEMA Interface with adjacent systems.

Handles all types of devices

Martek has experience feeding all types of devices to include PCB's, Lead Frames, Ceramic Substrates, Auer boats and machined process carriers.

Easily Configured

Easily configured for all types of magazines through Engineering user screens.

Optional: Recipe configurations and quick change tooling.

Heavy Duty Welded Construction

Welded steel frame insures reliability of critical alignments.

Small Footprint

One of the smallest footprints VS capacity in the industry.

Optional Features

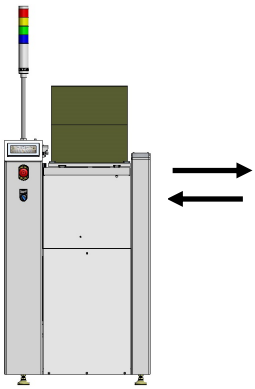

Bi-Directional Feed

Feed out and into same slot, index to next slot.

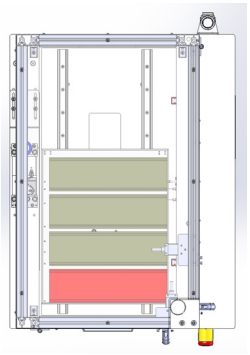

Reject Magazine

Dedicate one magazine to accept rejected parts from upstream Inspection cell

Dimensions

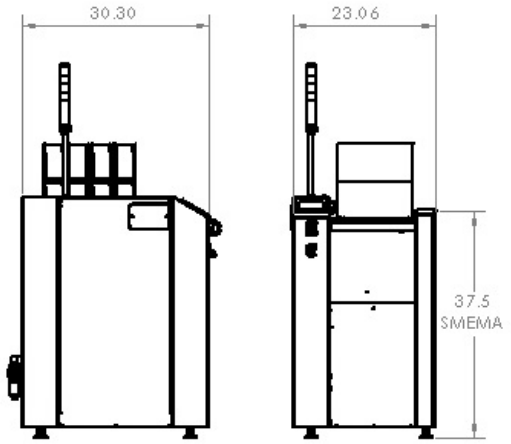

Service

110 / 208 VAC, 1 Ph. / 10 Amp. / 80 PSI / 1 SCFM

41728 Eastman Dr / Murrieta CA 92562 / 951.304.0541 ext. 101 / sales@martekautomation.com